Revision:	Changes:	Date:
1.0	Initial Case	2025.11.13
1.1	Changed PCBA Board & PCBA Gasket	2026.07.21
1.2	Changed PCBA Position, DST thickness and total module thickness	2026.09.04

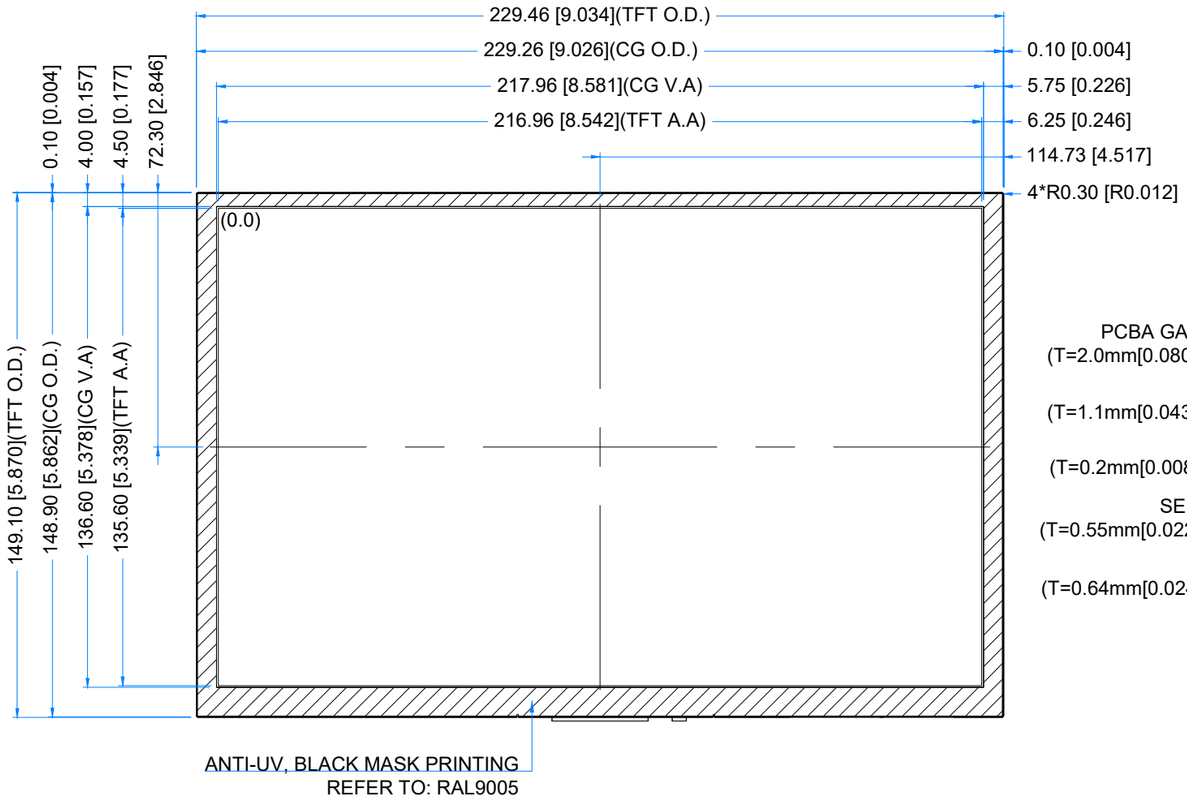

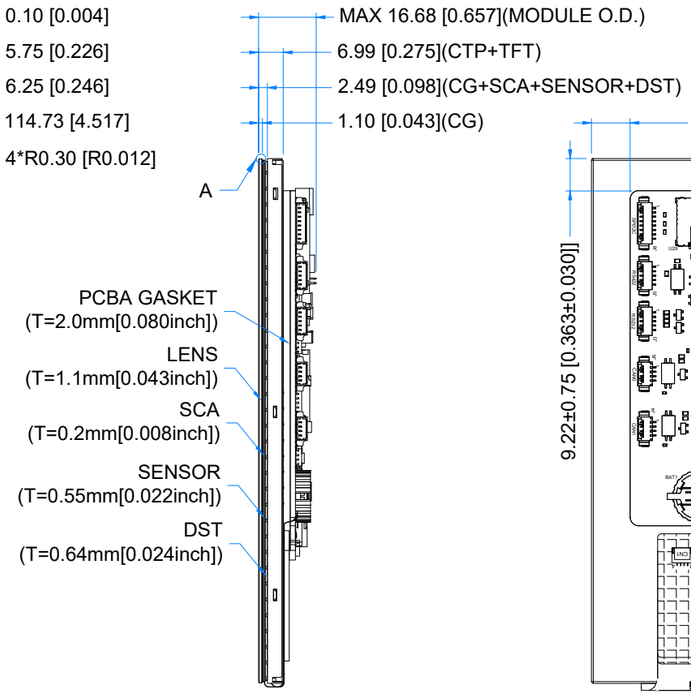

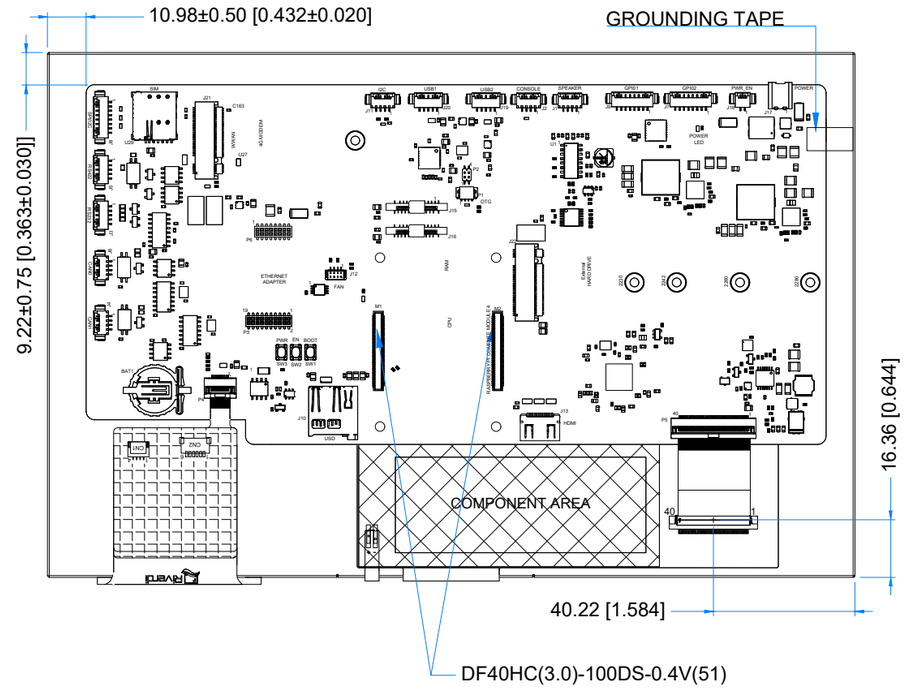

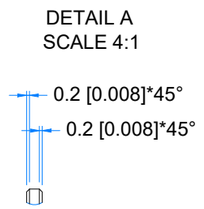

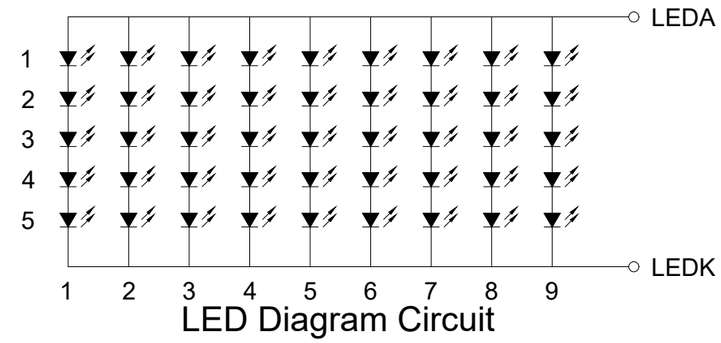

LED Diagram Circuit

1.25 MM MOLEX CONNECTORS			1.25 MM MOLEX CONNECTORS		
NO.	TYPE	MATE WITH	NO.	TYPE	MATE WITH
J18 (PWR_EN)	53261-0271	51021-0200	J20 (USB1)	53261-0571	51021-0500
J7 (GPIO2)	53261-0871	51021-0800	J11 (I2C)	53261-0471	51021-0400
J9 (GPIO1)	53261-0871	51021-0800	J8 (SPI/I2C)	53261-0871	51021-0800
J1 (SPEAKER)	53261-0471	51021-0400	J5 (RS422)	53261-0571	51021-0500
J2 (CONSOLE)	53261-0471	51021-0400	J3 (RS232)	53261-0571	51021-0500
J19 (USB2)	53261-0571	51021-0500	J6/J4 (CAN0/CAN1)	53261-0471	51021-0400

NO.	TYPE	MATE WITH
J17 (POWER)	PTSM 0.5/2-HH1-2.5-THR R16	PTSM 0.5/2-P-2.5

LCM NOTES:
1. LCD TYPE: TRANSMISSIVE, NORMALLY BLACK, IPS
2. RESOLUTION: 1280x800
3. VIEWING ANGLE: FREE
4. SUPPLY VOLTAGE FOR MODULE: 7.5V-55V
5. RaspberryPI Compute Module 4

TP NOTES:
1. TP STRUCTURE: G+G
2. CG THICKNESS: 1.10mm[0.043inch]
3. SURFACE HARDNESS: 7H
4. DRIVER IC: ILI2132A
5. INTERFACE: CONNECTED TO CM4 VIA I2C

GENERAL NOTES:
1. MODULE SURFACE LUMINANCE:800 cd/m^2
2. OPERATING TEMPERATURE: -20°C ~ 70°C
3. STORAGE TEMPERATURE: -30°C ~ 80°C
4. WITHOUT INDIVIDUAL TOLERANCE: ±0.3mm[0.012inch]
5. RoHS3 COMPLIANT

PN: RVT101HVCNWCA0 V1

SN:

Riverdi

DRAWN:	M.Stabinski	2026.09.03	1:1.74	
CHECKED:	M.Wierzbowski	2026.09.10	[mm]	
APPR:	M.Wierzbowski	2026.09.10	ISO A3	P. 1 of 1